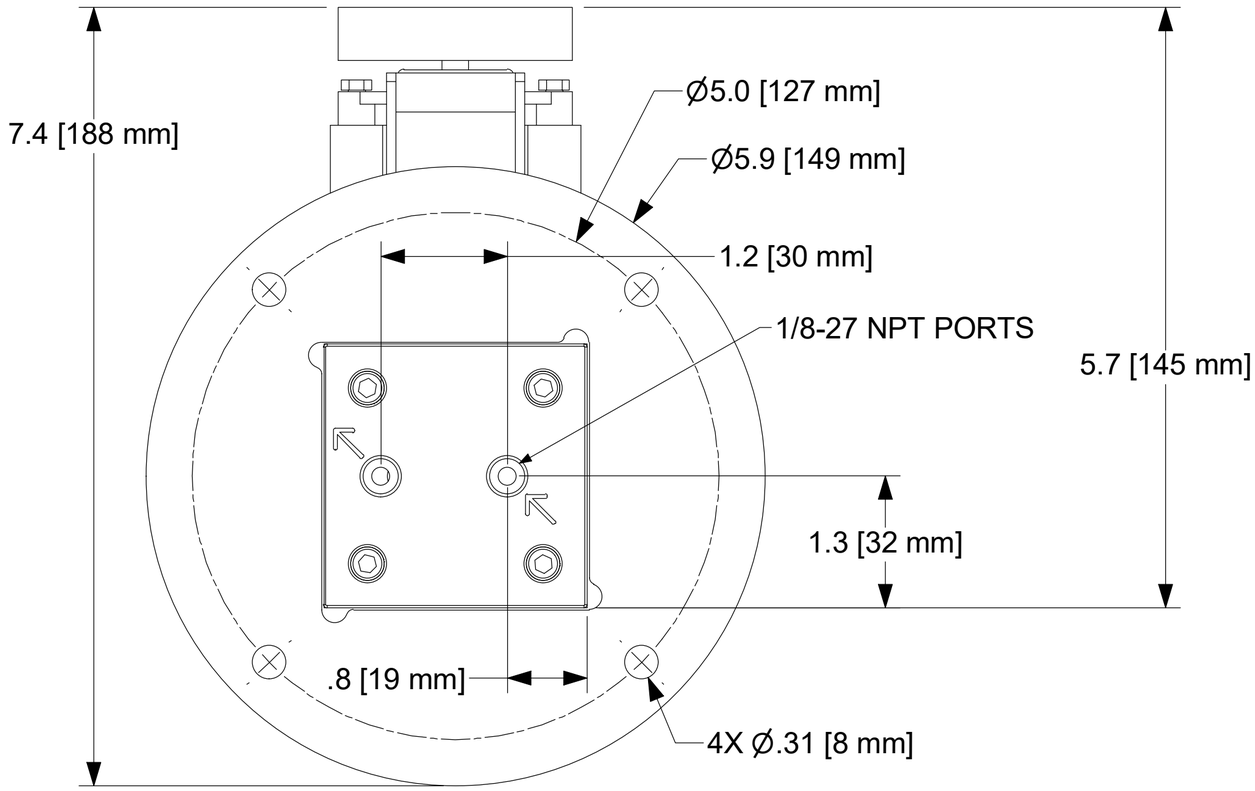

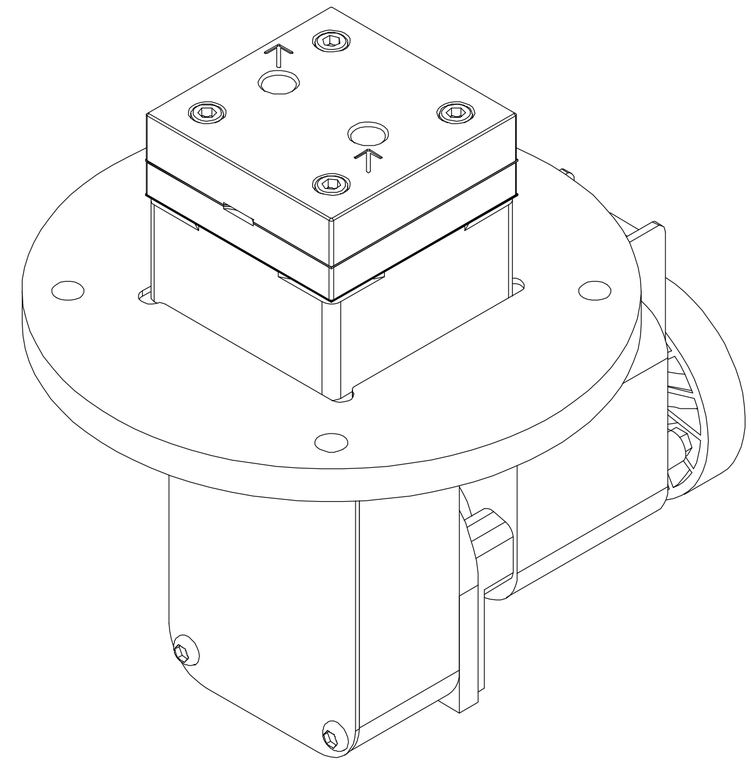

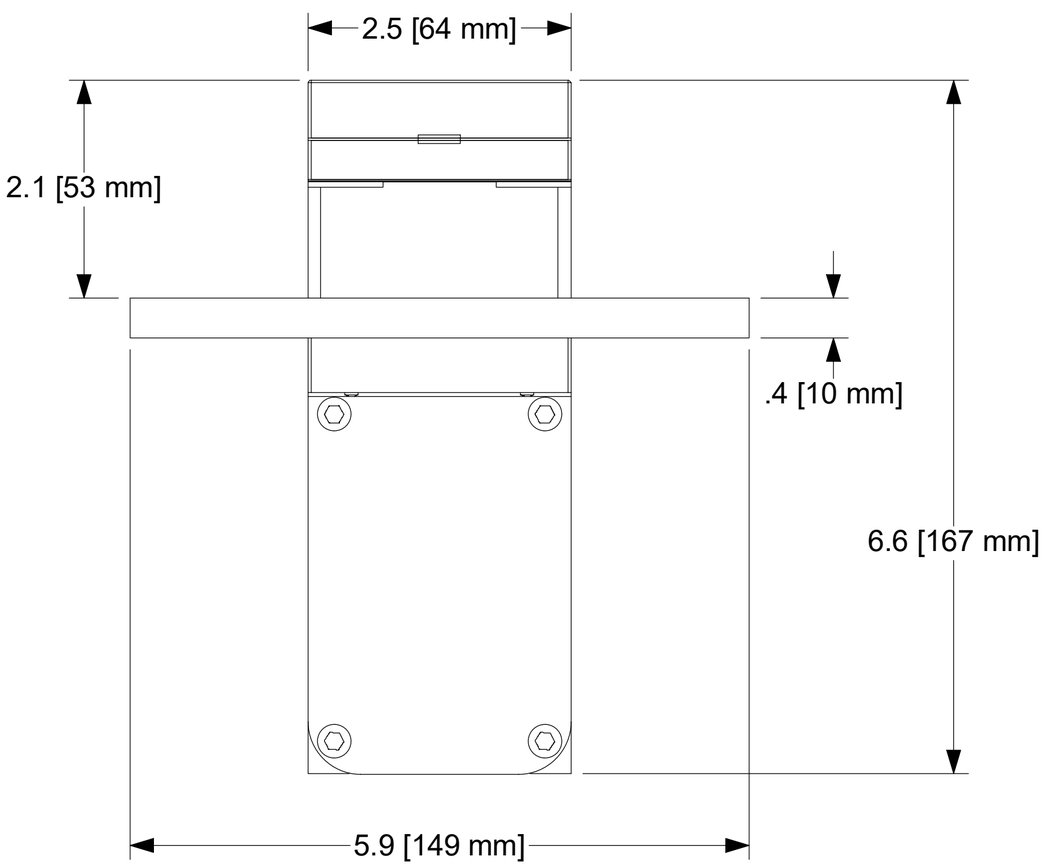

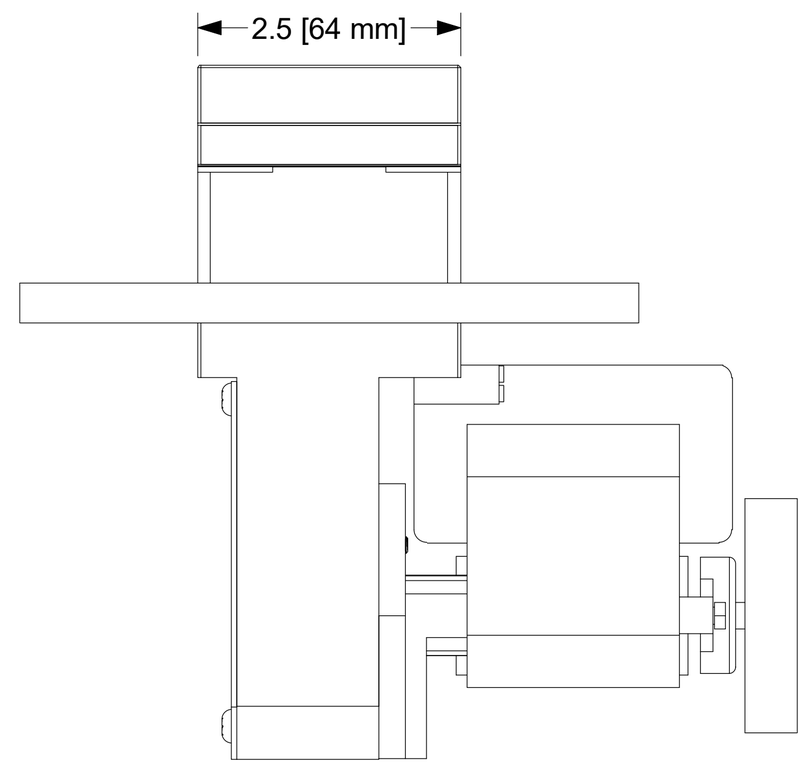

AIR DIMENSIONS INC.
DEERFIELD BEACH, FL. USA 33442
WWW.AIRDIMENSIONS.COM

DATE 4/10/2019	TITLE J-Series Elevated Pump		
APPROVED BY FDM	DWG NO Jxx1-xx-Axx-L	MODEL # Jxx1-xx-Axx-L	SHEET 1 OF 2

10/20 (2131)